# DUCTILE IRON SWING CHECK VALVE
## SERIES 9400
## OPERATION AND MAINTENANCE MANUAL

**Parts List**

| No. | Description | Material |
|---|---|---|
| 1 | Body | Cast iron |
| 2 | Disc | Stainless Steel,CF8 |
| 3 | Plug | Stainless Steel,SS304 |
| 4 | Washer | PTFE |
| 5 | Hook | Carbon Steel |
| 6 | Stem | Stainless Steel,SS420 |
| 7 | O-ring | Rubber, EPDM |
| 8 | Spring | Stainless Steel,SS304 |

**Valve Configuration**

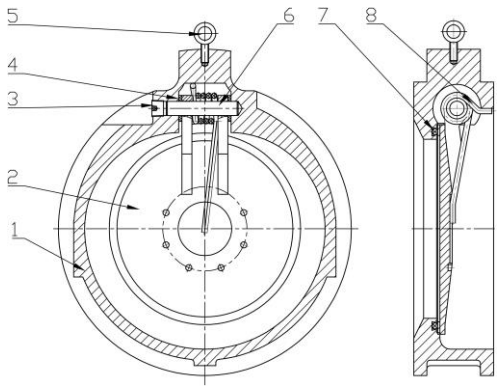


## PRESSURE/TEMPERATURE RATING

These valves must be installed in a piping system whose normal pressure and temperature do not exceed the above ratings non-shock pressure 250psi at temperature 15°F to 250°F

If the limits of use specified in these instructions are exceeded or if the valve is used on applications for which it was not designed, a potential hazard could result.

## LAYOUT AND SITING

These Check Valves may be installed in horizontal pipework and vertical pipework if the flow is in an upwards direction.

## INSTALLATION

Prior to installation, a check of the identification plate and body marking must be made to ensure that the correct valve is being installed.

Valves are precision manufactured items and as such, should not be subjected to misuse such as careless handling, allowing dirt to enter the valve through the end ports, lack of cleaning both valve and system before operation and excessive force during bolting.

All special packaging material must be removed.

J&S Valve

**Note:** The valve must be installed with the direction arrow on the body coincident with the direction of flow in the pipeline. For vertical pipework the flow direction should be upwards only.

In horizontal pipework the valve must be installed so that the stem is horizontal.

The valve interior should be inspected through the end ports to determine whether it is clean and free from foreign matter.

The mating flange (both valve and pipework flanges) should be checked for correct gasket contact face, surface finish and condition. If a condition is found which might cause leakage, no attempt to assemble should be made until the condition has been corrected.

The gasket should be suitable for operation conditions or maximum pressure/temperature ratings.

The gaskets should be checked to ensure freedom from defects or damage.

Care should be taken to provide correct alignment of the flanges being assembled. Suitable lubricant on bolt threads should be used. In assembly, bolts are tightened sequentially to make the initial contact of flanges and gaskets flat and parallel followed by gradual and uniform tightening in an opposite bolting sequence to avoid bending one flange relative to the other, particularly on flanges with raised faces.

Parallel alignment of flanges is especially important in the case of the assembly of a valve into an existing system.

At the conclusion of installation and before operating, all dust deposits shall be removed from the equipment.

## OPERATING

The Swing Check valve is self-acting.

## MAINTENANCE

The valve should be at zero pressure and ambient temperature prior to any maintenance.

Maintenance Engineers & Operators are reminded to use correct fitting tools and equipment.

Tools are either "single spark" e.g. screwdriver, spanner, impact screwdriver or "shower of sparks" e.g. sawing or grinding.

Tools causing showers of sparks are only permissible if:

- no hazardous explosive atmosphere is present.
- dust deposits have been removed and no dust cloud is present.

A full risk assessment and methodology statement must be compiled prior to any maintenance. This must include the removal of dust deposits by good housekeeping.

A maintenance program should therefore include checks on the development of unforeseen conditions, which could lead to failure.

**Leakage from the stem:**

1. Isolate the system.
2. Turn left to remove the plugs (part 3) .
3. Wrap PTFE strap on plug for 8-10 layers.
4. Reinstall the plug on valve.

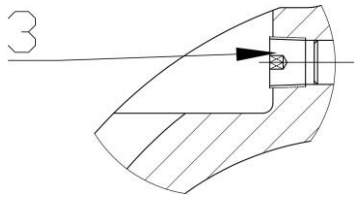


**Replace the stem:**

1. Isolate the system, remove the valve from the pipeline.
2. After remove the plug, thread the tool into the stem, then pull out it.
3. Take a new stem insert the valve.
4. Wrap PTFE strap on plug for 8-10 layers, then tighten it on the valve.

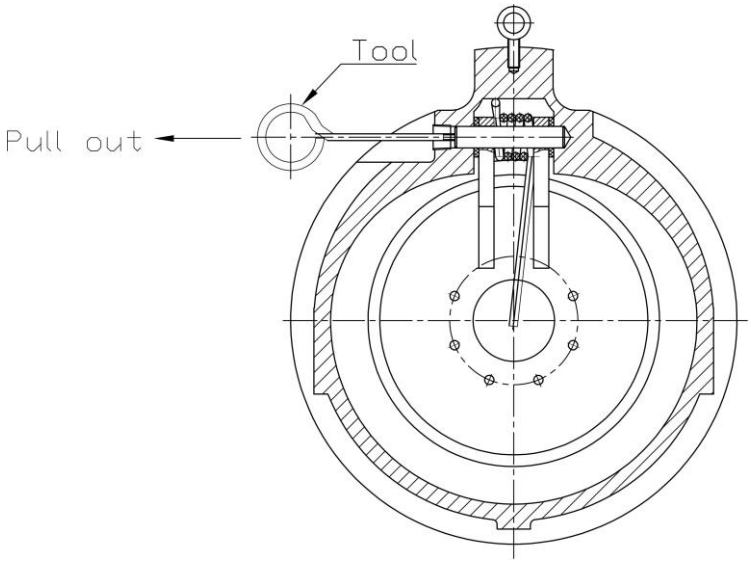


**Replace the Spring:**

1. Isolate the system, remove the valve from the pipeline.
2. Remove the stem as above specification.
3. Remove the old spring, take a new one and press it till insert the stem.
4. Wrap PTFE strap on plug for 8-10 layers, then tighten it on the valve.

**Replace the O-ring:**

1. Isolate the system, remove the valve from the pipeline.
2. Open the disc, remove the old o-ring from the valve, clean the groove.
3. Take a correct o-ring, carefully press it into the groove.

Note: don't need to disassembly other parts when replace the o-ring.